V-BOX LARGE

■ vesper-cats.com

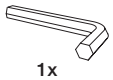

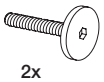

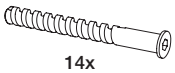

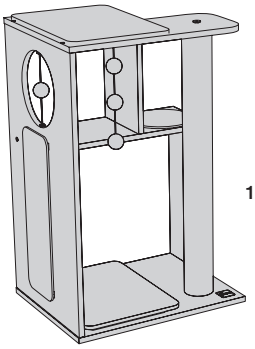

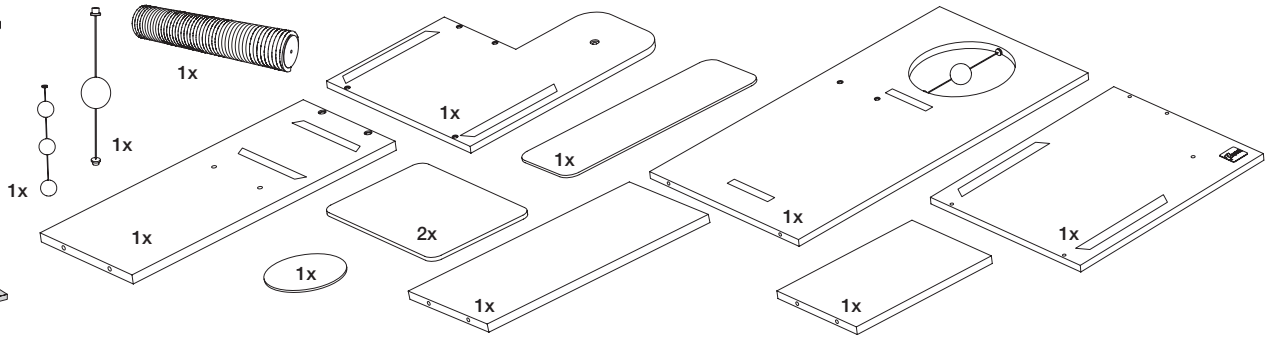

1.

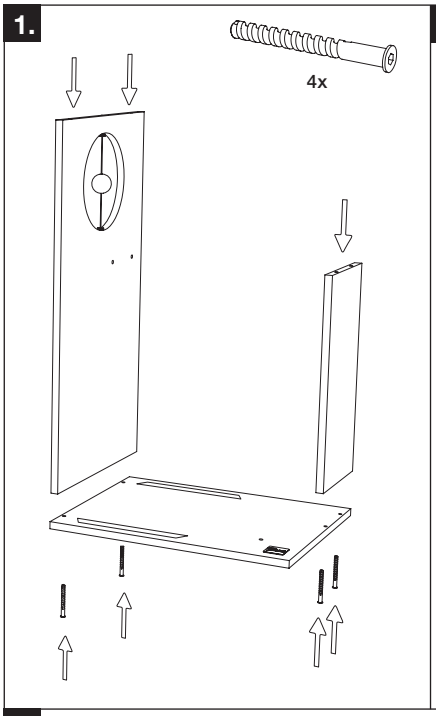

2.

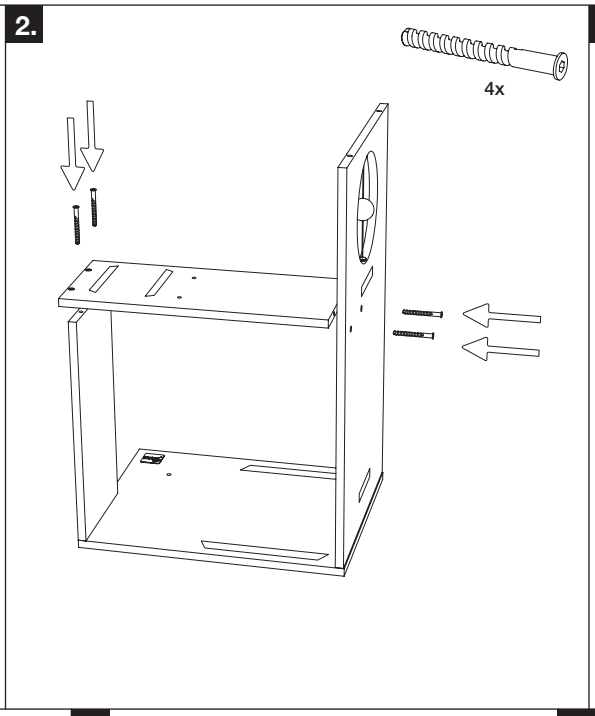

3.

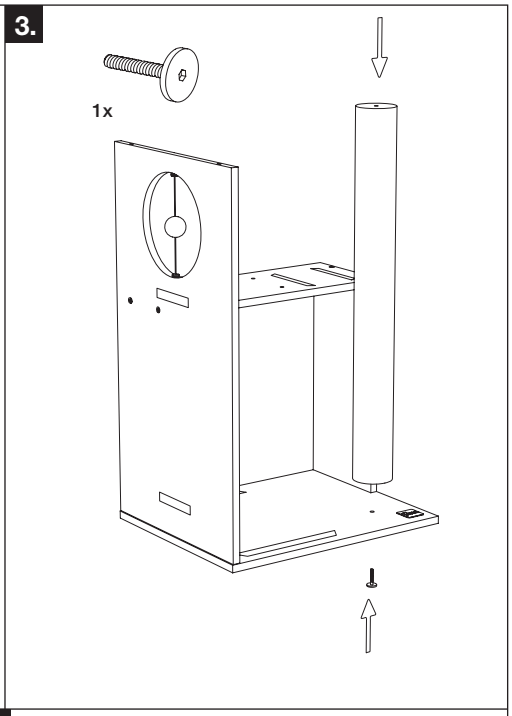

4.

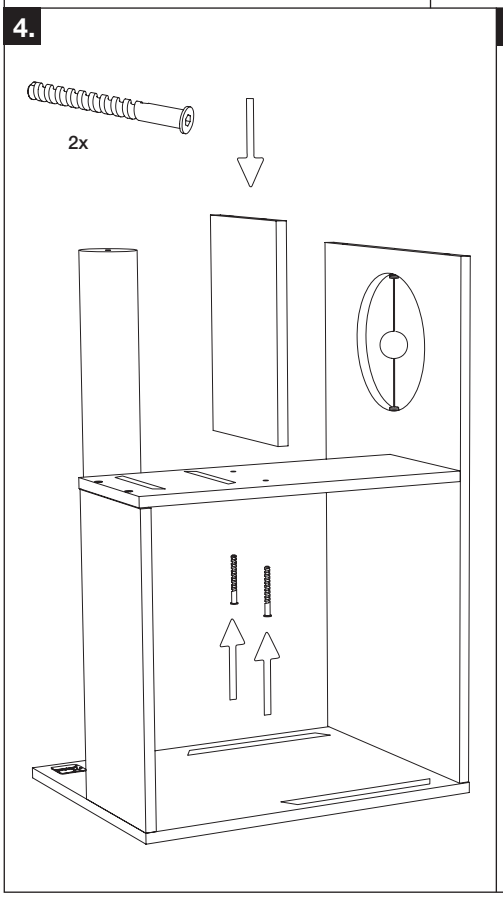

5.

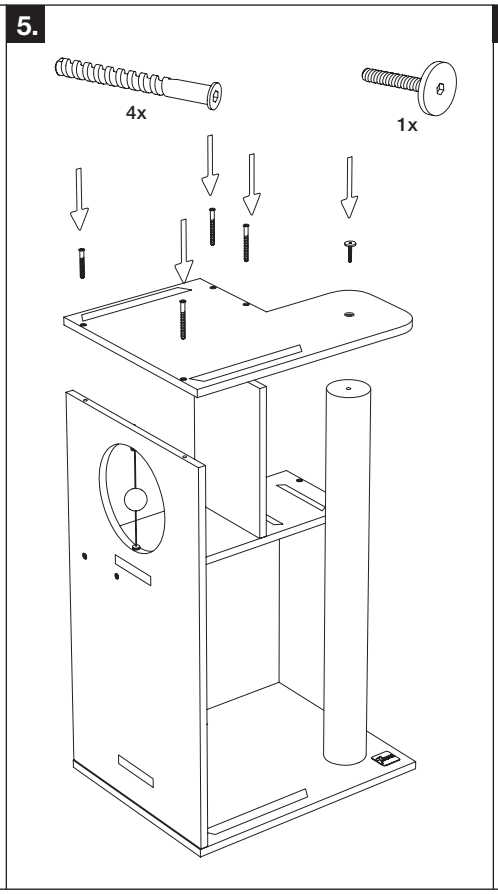
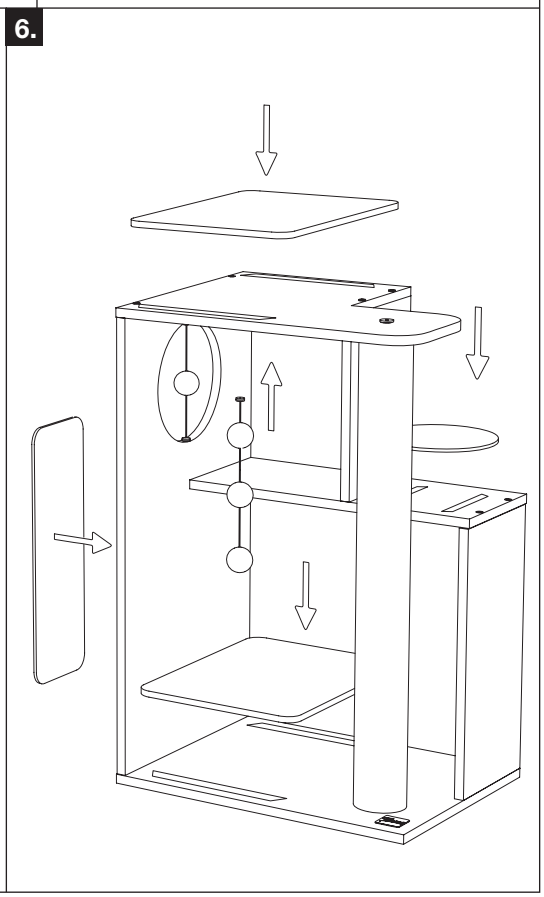
6.